PRECISION TECHNOLOGY

The Art of Linear Thinking™

Mounting and Maintenance Instructions

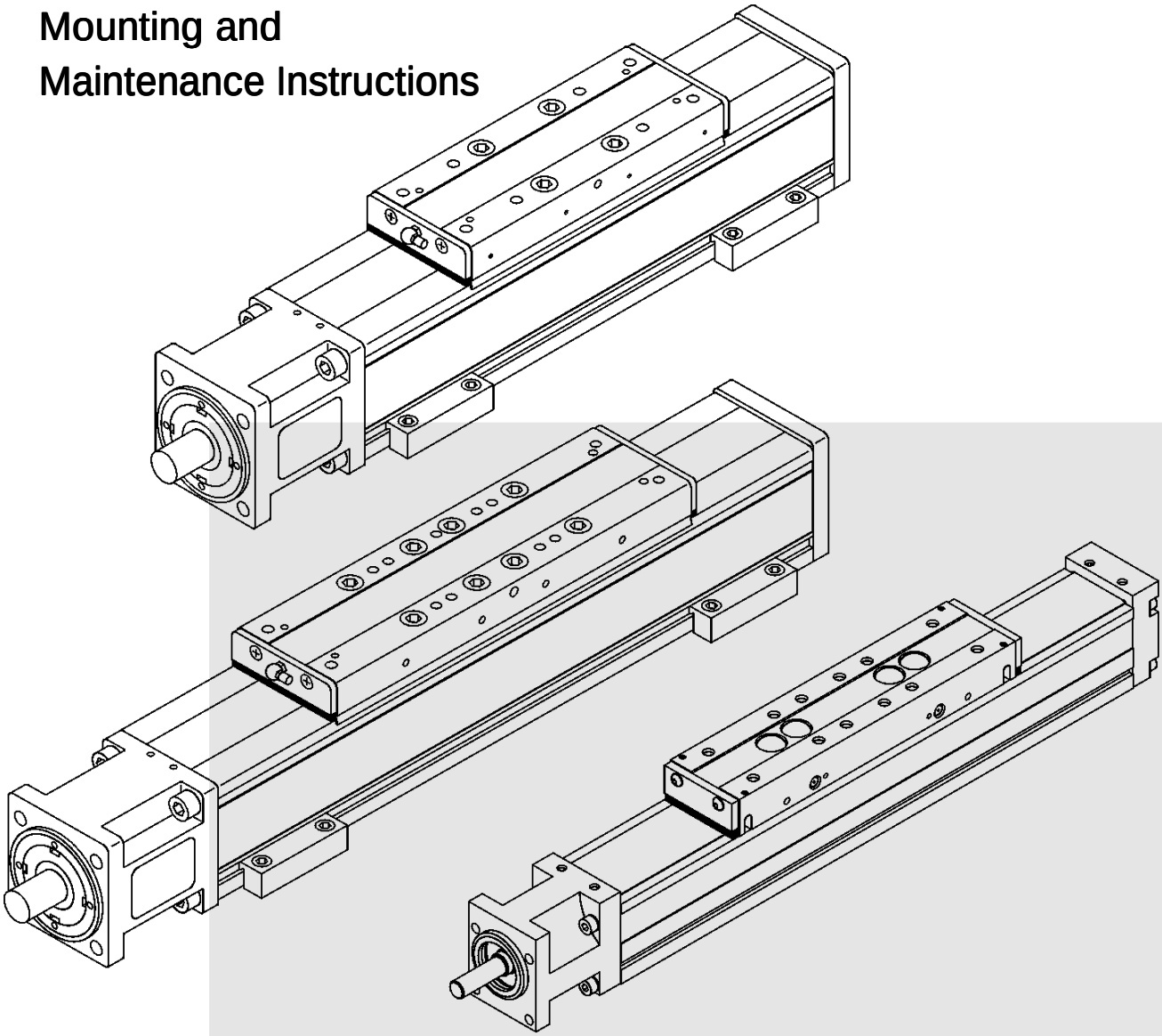

WIESEL *POWERLine*®

WM40 / WM60 / WM60-370 / WM60-500 / WM80 / WM80-370 / WM120

WIESEL *DYNALine*®

WV60 / WV80 / WV120

Mechanical Linear Drive Units

Contents

1. Safety

The equipment is built to the modern state of technology and the relevant regulations. Special attention has been paid to the safety of the user.
The equipment conforms to the EU Machine Guideline, the harmonised standards, European standards or the corresponding national standards:

- DIN EN 292-1 and DIN EN 292-2:
  Safety of Machines, Equipment and Systems
- DIN EN 418:
  Safety of Machines, Emergency-Off devices
- DIN EN 60 204:
  Electrical equipment for Industrial machines
- DIN EN 50 081-2 and DIN EN 50 082-2:
  Electromagnetic compatibility EMC

This is confirmed by a manufacturer's declaration.

The following regulations must be complied with:

- the relevant regulations for the prevention of accidents,
- generally recognised safety regulations,
- EU guidelines,
- any other applicable standards
- national regulations.

Importance of the operating manual

The operating manual is part of the unit and must:

- Always be kept handy until disposal of the unit.
- Be passed on when the unit is being sold, alienated or rented.

If there is anything in the operating manual that you do not understand, you absolutely must contact the manufacturer.

Inevitable residual risks for people and material assets come from this unit. For this reason, everybody working on this unit and dealing with its transport, mounting, operating, maintenance and repairs must be introduced to the job, and know the potential dangers. For that it is necessary to carefully read, understand and respect the safety instructions.

Lacking or insufficient knowledge of the operating instructions lead to the loss of all claim liability against NEFF Antriebstechnik Automation GmbH. We therefore recommend the user to get a written confirmation from the operators that they have been introduced to the unit.

Authorised use

The mechanical linear drive units WIESEL DYNALine® and WIESEL POWERLine® are designed exclusively for positioning, continuously moving, conveying, palletising, loading, unloading, clamping, tensioning, checking, measuring, handling, manipulating, and pushing workpieces or tools.

In general, the main uses of the DYNALine® and POWERLine® series must be taken into account (cf. Chapter 2 “Product “ and Chapter 10 “Technical Data“).

Any other or additional use is considered as unauthorised. The manufacturer is not liable for damages resulting from such applications. The user alone bears the risk.

Since the linear drive units can be applied in various areas, the user is responsible for the specific application as soon as use begins.

To ensure the electromagnetic compatibility of machines (EMC regulations), the mechanical linear drive units WIESEL DYNALine® and WIESEL POWERLine® must be used only in an industrial environment (according to Definition EN 50 081-2, see Chapter 5 “Commissioning”)

Responsibilities of the user

According to EU directive for the use of materials 89/655/EEC Art. 6(1) and 7, and the fundamental EU directive 89/391/EEC Art. 1(1) and Art. 6(1), the user is committed to instruct the persons who will be engaged in the mounting, operating, maintenance or dismantling of a linear drive unit, not only generally, but also in safety regulations.

In addition, according to the EU directive for the use of materials, 89/655/EEC Art. 4a the user is committed to check the unit before commissioning after repairs and malfunctions.

Operating personnel

The linear drive units are built according to state-of-the-art technology and are in line with applicable safety regulations. Nevertheless, dangerous situations may occur when they are used. Therefore the units may only be assembled and operated by competent, qualified personnel, and used only for the authorised application.

Any person required to assemble, operate, service, repair or dismantle a linear drive unit must have read and understood these instructions, and in particular Chapter 1”Safety”.

Work on parts under electrical current, such as:

- Installation of limit switches,
- Mounting of a drive, and
- Checking its direction of rotation

must only be carried out by trained electricians.

Residual risk and hazards

Should a risk of damage to material or injury to persons remain despite the structural safety of the unit, the user must draw attention to such hazards by means of suitable warning notices or written instructions indicating safety precautions.

Information plates and labels

Keep lettering, information plates and stickers completely legible, and follow them at all times.

Renew any damaged or illegible information plates and labels.

Modifications and alterations to the unit

The linear drive units must not be altered either in design or with regard to safety without our written permission. Any unauthorised alteration of this kind frees us from any liability.

Worn and spare parts may only be replaced after consultation with our service technicians, or by them personally.

It is not permitted to disassemble or disconnect any safety or protection device.

When using special accessories, you must observe the manufacturer’s assembly instructions!

The following regulations must be complied with:

- the relevant regulations for the prevention of accidents,
- generally recognised safety regulations,
- EU guidelines and
- national regulations.

Warranty

The warranty conditions have been defined in the sales documentation. All right to claims under warranty are lost if:

- The machine is used for a purpose other than the authorised purpose.
- The instructions in this manual are not observed,
- the machine is altered without the manufacturer’s permission,
- screws sealed with securing lacquer have been opened.

The manufacturer is liable only when original replacement parts are used for maintenance and repair.

Safety notices in the operating instructions

This symbol indicates potential danger to persons. Observe these notices to avoid injury.

This symbol indicates potential danger to the machine. Observe these notices to avoid damage to the machine.

This symbol indicates special information
- for optimum use, or
- for easier operation of the machine.

2. Product description

WIESEL linear drive units are often used for the transport and/or precise positioning of loads.

Two series are available: WIESEL POWERLine® in the sizes WM40, WM60, WM60-370, WM60-500, WM80, WM80-370 and WM120, and WIESEL DYNALine® in the sizes WV60, WV80 and WV120.

WIESEL linear drive units consist of the following functional assemblies (Fig. 1 - Fig. 3):

- Sliding carriage (1)
- Tubular section with sliding bars (9) (DYNALine® series) or guideways (6) (POWERLine® series, sizes WM60, WM80 and WM120)
- Ball-bearing guided carriage (8) (POWERLine® series, sizes WM60, WM60-370, WM60-500, WM80, WM80-370 and WM120)
- Guidance system (12, 13) (on WM40)
- Ball screw (4)
- Ball nut unit (10)
- Covering strip (7)
- Bearing housing and fixed bearing (11)

The ball screw is usually driven by an electric motor. The motor may be either flanged on directly, or built on via angle drive or belt drive (sizes WM40, WM60, WM60-370, WM60-500, WM80 and WM80-370).

The range can be arranged to cover an area or spatially arranged, by appropriate combination of WIESEL linear drive units from the POWERLine® series.

The sliding carriage (1) is used as assembly and mounting surface for the load to be moved. The scraper brushes (2) mounted on the sliding carriage remove coarse dirt from the surface of the tubular section (3).

The tubular section serves as a protection for the ball screw (4) and as a guideway for the screw supports (5). A flexible cover strip (7) seals the upper tube opening in front of and behind the sliding carriage.

Fig. 1: On size WM40 of the POWERLine® series, the ball return guide (12, 13) is attached inside the tubular section.

Fig. 2: On the POWERLine® series, sizes WM60, WM60-370, WM60-500, WM80, WM80-370 and WM120, an additional ball return guide (8) is integrated in the tubular section.

Fig. 3: ON the DYNALine® series, the sliding bars (9) serve only for the commissioning of the linear axis, when no external forces or moments can occur. This series is designed solely for use as a feeder axis – all external forces and moments must be taken up by external guides, without which it is not possible to operate the DYNALine® series.

Fig. 1: On size WM40 of the POWERLine® series, the moment is transmitted via two ball return guide carriages (12) on the guidance system (13) screwed into the tubular section. Lubrication is by four grease nipples and grease ducts (see Chapter 5 “Lubrication”). The respective end and stop points can be registered via various measuring systems (rotary transducer, resolver, glass rod etc.)

Fig. 2: On the sizes WM60, WM80 and WM120 of the POWERLine® series, four ball-bearing guided carriages, on sizes WM60-370, WM60-500 and WM80-370 two covered ball-bearing guided carriages (8) transmit the moments from the sliding carriage to the tubular section. The balls run in hardened guide ducts (6). Lubrication is by central grease nipple and grease ducts (see Chapter 5 “Lubrication”).

In addition to the limit switches that can be read off by the controls, sizes WM60, WM60-370, WM60-500, WM80, WM80-370 and WM120 can have adjustable electromagnetic safety limit switches added on for both end points (see chapter 0 “**Adjusting the maximum length of travel”).**

Mechanical safety limit switches must be used if the failure of the electric drive to switch off could endanger persons.

A declaration of conformity according to EU Guideline for Machines must be available for the safety limit switches.

On the size WM40, the mechanical safety limit switches must be attached by the user!

The WIESEL DYNALine® linear drive units serve as feed units and can only be operated in association with external guideways!

WIESEL POWERLine® WM40

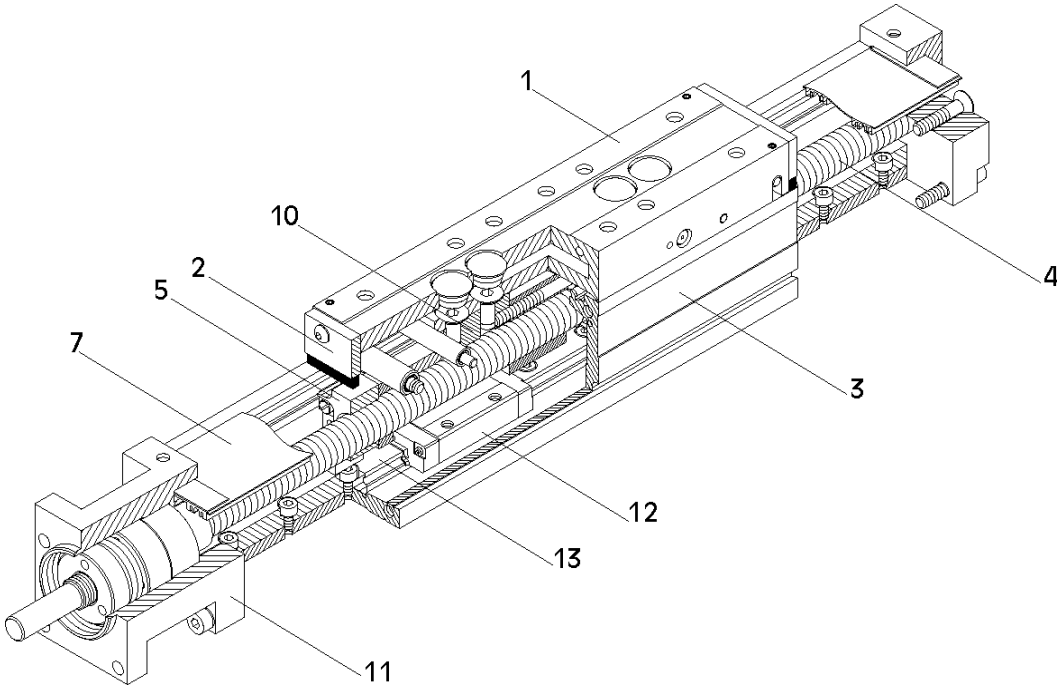

Fig. 1

WIESEL POWERLine® WM60, WM80, WM120

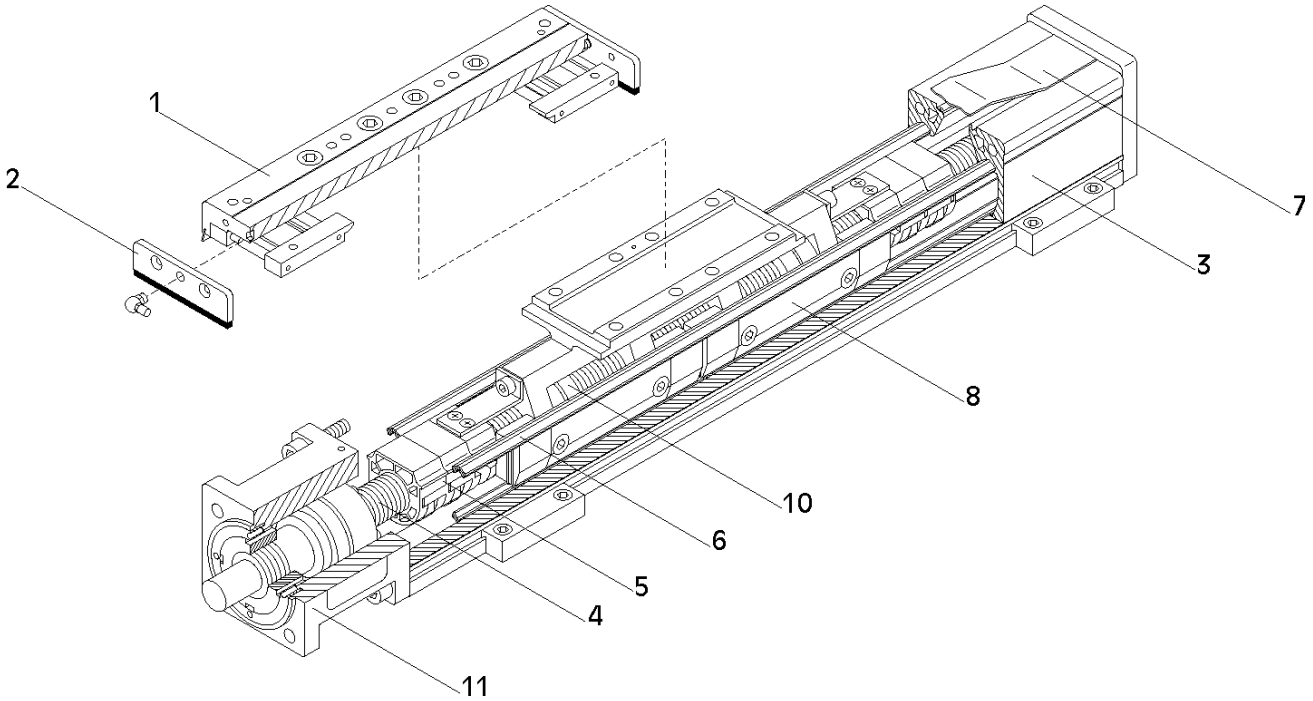

Fig. 2

WIESEL DYNALine®

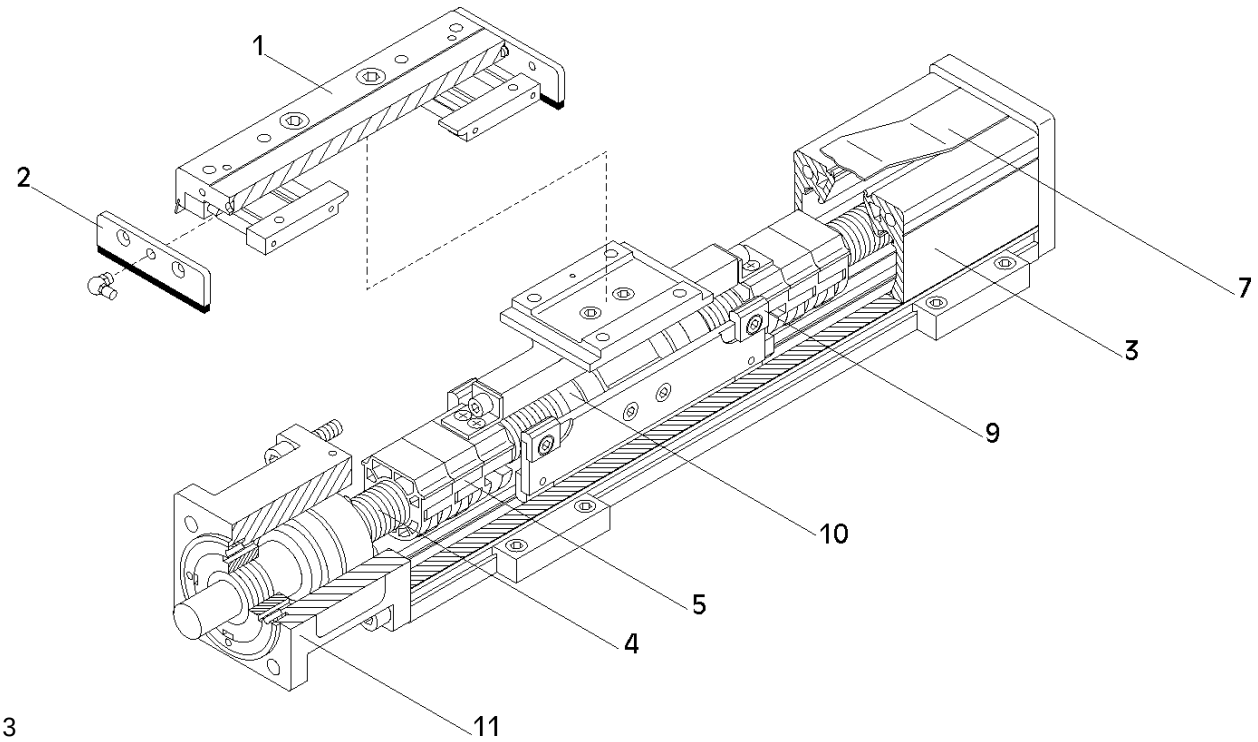

Fig. 3

3. Storage and transport

The WIESEL DYNALine® and WIESEL POWERLine® mechanical linear drive units are high-precision devices. Heavy impact could damage the precise mechanical parts of the devices, thus impairing their function. To prevent damage in storage and transport, the linear drive units should be in padded packaging, and:

- Protected from damage and heavy shocks,
- Secured against slipping,
- put in a sufficiently large crate.
- Assembled linear drive units must be transported only with the transport securing equipment provided.

For the weight of the device, see the table in Chapter 10 “Technical Data“.

Protect the device from:

- dirt,
- corrosion,
- water,
- aggressive atmosphere.

4. Mounting a linear drive unit

Integrated Guideways (POWERLine®)

The linear drive unit is fixed by means of mounting brackets (KAO brackets) fitted to the aluminium tubular section. The tubular section must always be fastened to level surfaces. Standard parallelism <0.01mm per 100mm.

The linear drive unit must be aligned to comply with the requirements of the intended use. The following procedure is suggested:

1. Loosen the relevant mounting bracket.
2. Align the linear unit and/or mounting bracket accordingly, and refasten. If necessary:
3. Loosen other mounting brackets and repeat the procedure.

Mounting over-length linear drive units:

1. Remove transport securing piece.
2. Support the joint adequately.
3. Attach the KAO brackets to the right and left of the joint.

Full load moment is possible only when the distance between the KAO brackets ≤ 750mm. Because the load when placed on top increases the deformation of the aluminium profile, the distance between the KAO brackets must be reduced in this case (for KAO tightening torques, see table in Chapter 10 “Technical Data“).

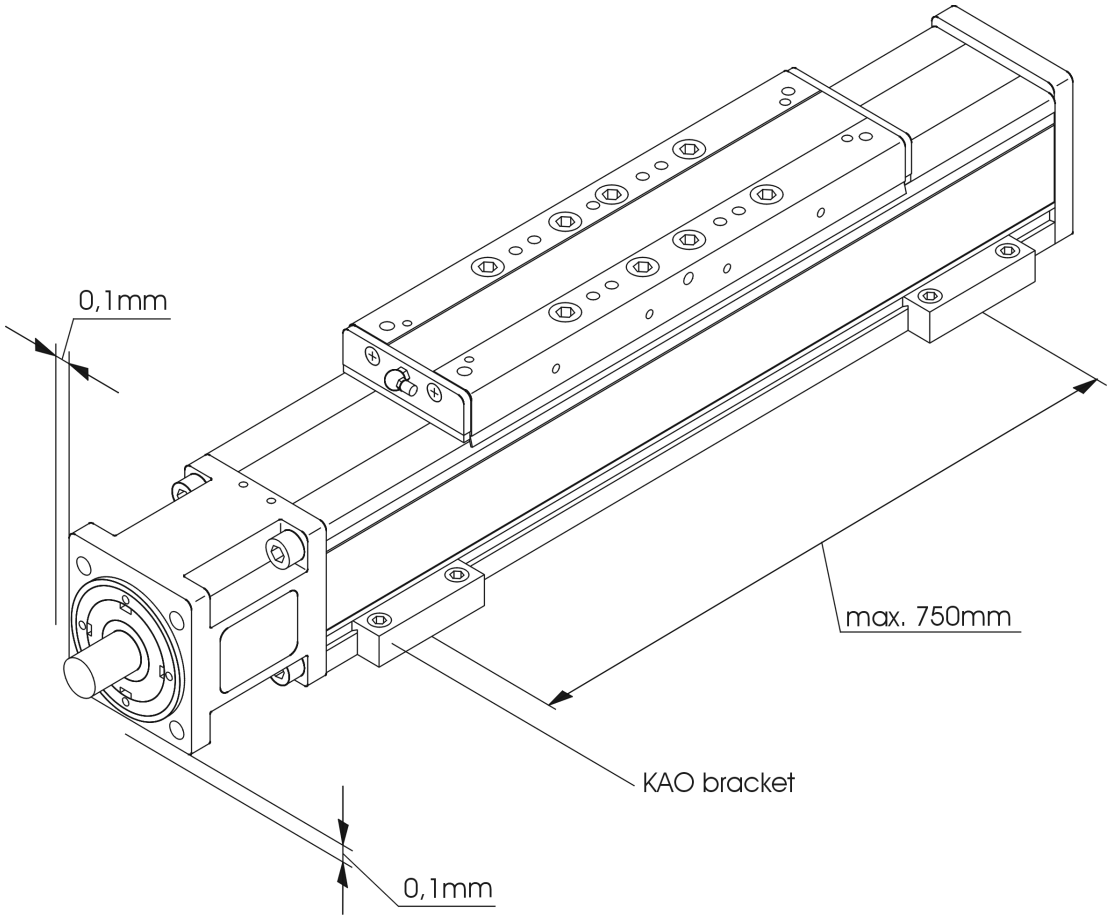

Fig. 4

External Guideways (DYNALine®)

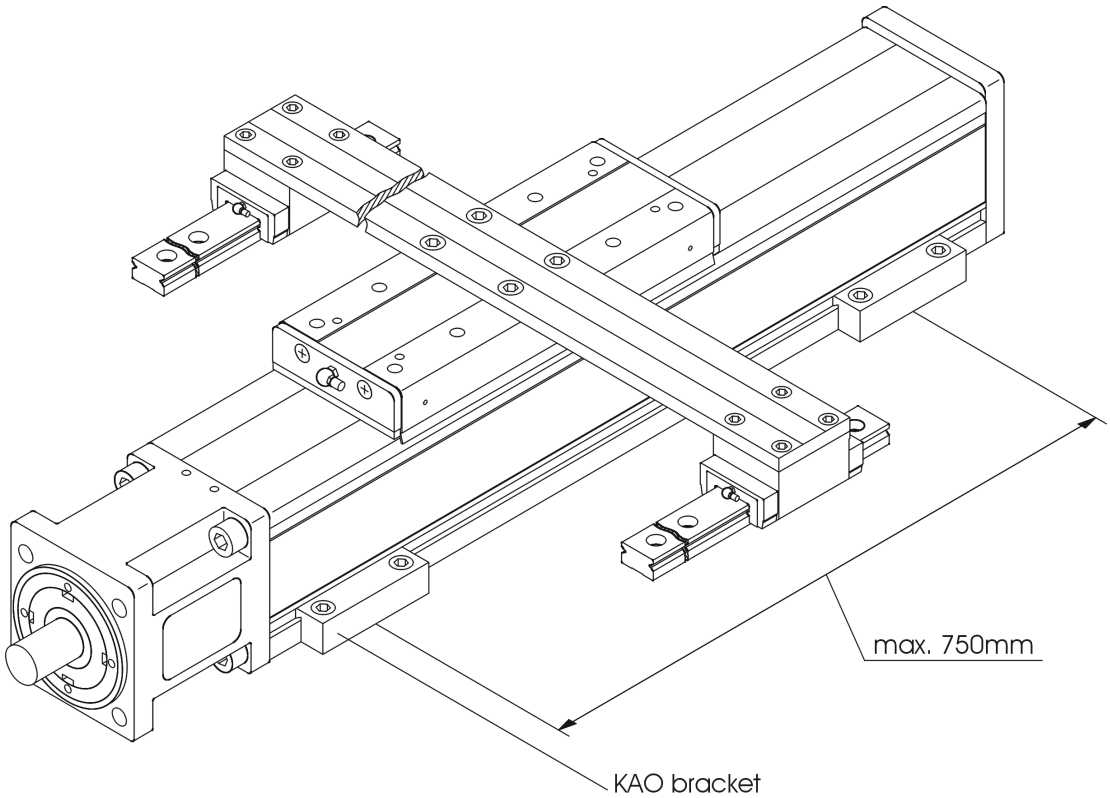

Fig. 5

Prerequisite for the assembly of the linear drive unit is the presence of already aligned external linear guideways. Their assembly and alignment must be carried out in compliance with the instructions of the manufacturer.

Parallelism between the external guideways and DYNALine® must be no greater than 0.1mm per 100mm.

The linear drive unit must be aligned analogously to the description in the previous section (Integrated guideways).

> **!** It must be ensured that all forces and moments that occur are taken by the external guideways only, and that the DYNALine® linear axis must only transmit the axial feed force!

Adjusting the maximum length of travel

> ⚠ Provide for sufficient overrun length for braking in case of emergency stop.

> ⚠ Electrical switches must be installed by trained electricians only.

> ⇨ Note circuit diagram on the limit switch.

Inductive p**roximity switches**

Inductive proximity switches are used to cut off the electrical drive before the final position is reached. The necessary stopping distance depends on the speed and the braking effort. This braking distance must at least end between the switch point of the proximity switch and the actual, mechanical end of position.

Determining the final position

The contact surface of the limit switch must be completely covered by the switch flag just before the sliding carriage reaches the safety zone.

1. Fig. 6: Release the proximity switch by loosening the attachment screw (1).
2. Move the proximity switch (2).
3. Fix the proximity switch in position by tightening the attachment screw. In doing so, ensure that the proximity switch is fully locked into the profile groove.
4. Check the position of the limit switch by turning the screw by hand.
5. If necessary, repeat the procedure.
6. Attach the limit-switch profile cover.

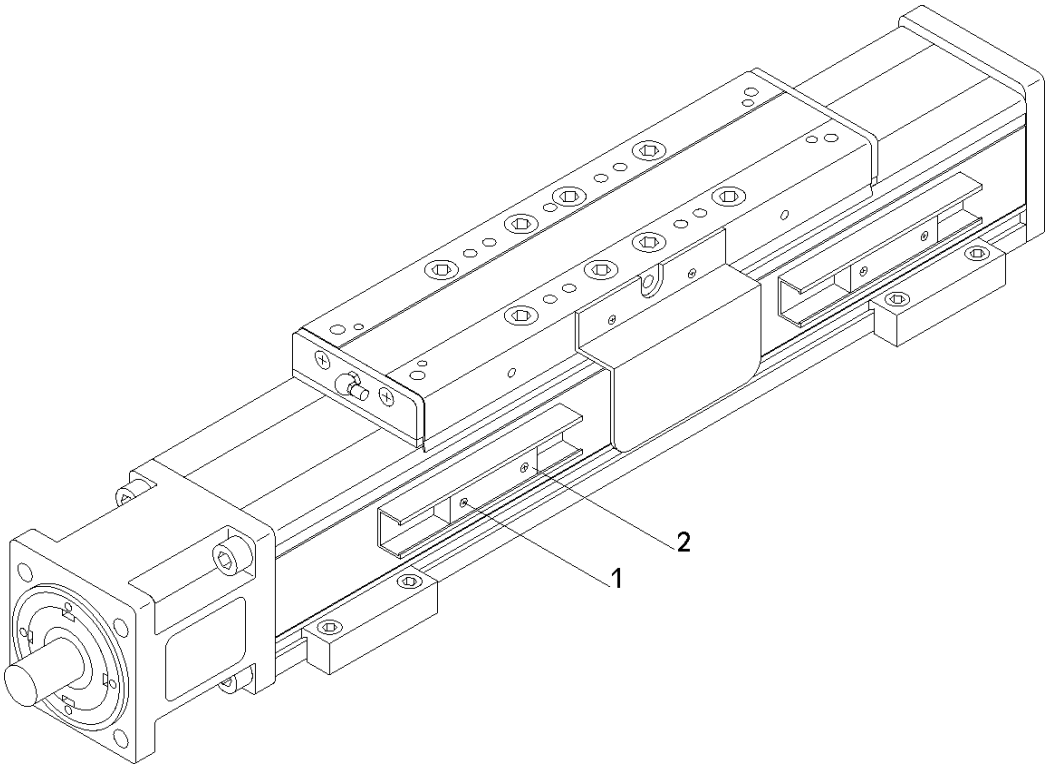

Fig. 6

Mechanical safety limit switches

Mechanical safety limit switches must be used if the failure of the electric drive to switch off could endanger persons.

On size WM40, the mechanical safety limit switches must be attached by the user!

The drive must not be commissioned before all limit switches are attached and correctly adjusted!

The mechanical safety limit switches are inserted in the groove that serves to locate the KAO brackets in the IM aluminium profile. Elongated holes allow adjustment.

Size	G for WM	G for WV
WM/WV 60	94	64
WM/WV 80	104	64
WM/WV 120	119	84

Determining the end position:

The switching flag must have opened the limit switch just before the sliding carriage reaches the safety zone (dimension G, see table).

Adjustment of limit switches:

1. Fig. 7: Loosen the clamping screw (2) of the mounting plate (1).
2. Move the mounting plate with the limit switch (3) to the desired position.
3. Fasten the mounting plate by tightening the clamping screw.
4. Check the position of the limit switch by turning the screw by hand.
5. If necessary, repeat the procedure.

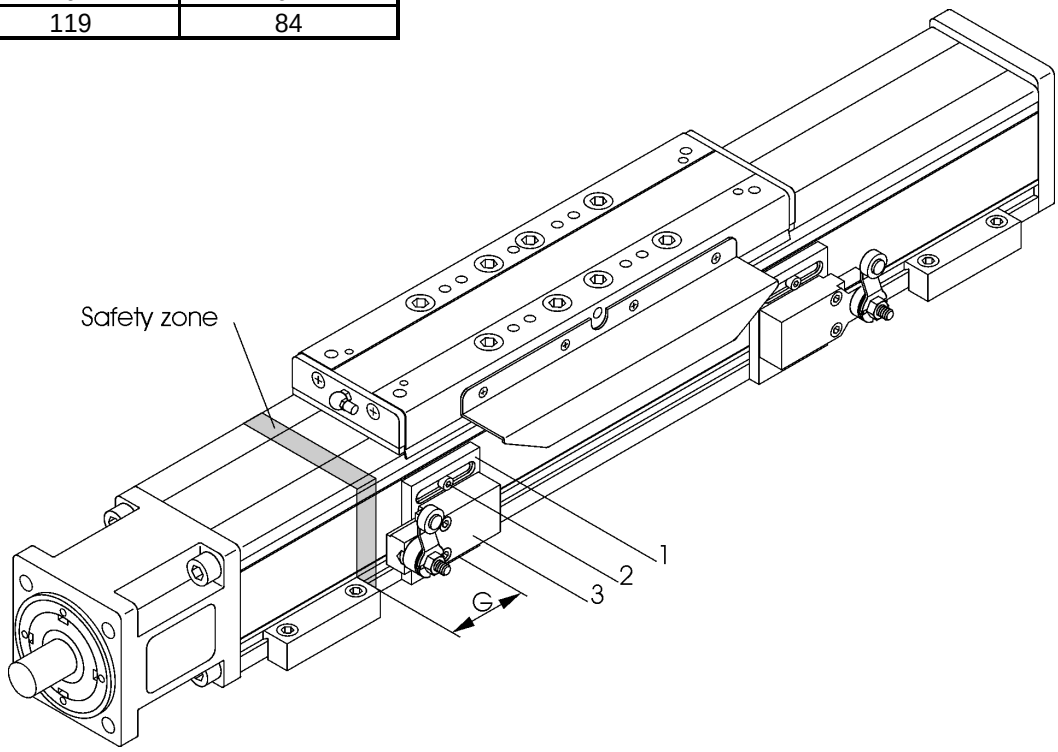

Fig. 7

Assembly of Belt Drive RT40

1. Fig. 9: Fasten housing (6) to the bearing housing of the WM40 using adapter plate (7).
2. Put synchronous sprocket (4) with DKWN tension set, inside diameter 8 mm (5) on the drive shaft of the WM40.
3. Attach drive motor with adapter flange (11) on housing. Do not tighten the screws yet.
4. Put synchronous sprocket (9) with DKWN tension set, inside diameter 14 mm (10) on the motor shaft.
5. Lay toothed belt (3) round both synchronous sprockets, aligning them with each other. Then fix the synchronous sprockets on drive shaft and motor shaft with DKWN tension sets. (For tightening torque of the screws on the DKWN tension set, see table in Chapter 10 “Technical Data“) Distance between top edge of housing and synchronous sprocket: 3mm (see Fig. 8).

Tightening the RT40 belt drive

6. Fig. 9: Tighten toothed belt by shifting the motor with adapter flange (11).
7. Screw cover plate (2) onto housing.

Parts list, belt drive RT40

Item	Designation
1	Countersunk screw DIN966, M6x30
2	Cover plate
3	Toothed belt 10 T5
4	Synchronous sprocket AL 15 AT 5
5	DKWN tension set 8-18
6	Housing
7	Adapter plate
8	Cheese-head screw DIN912, M4x16
9	Synchronous sprocket AL 15 AT 5
10	DKWN tension set 14-26
11	Adapter flange
12	Cheese-head screw DIN912 (size depends on motor)

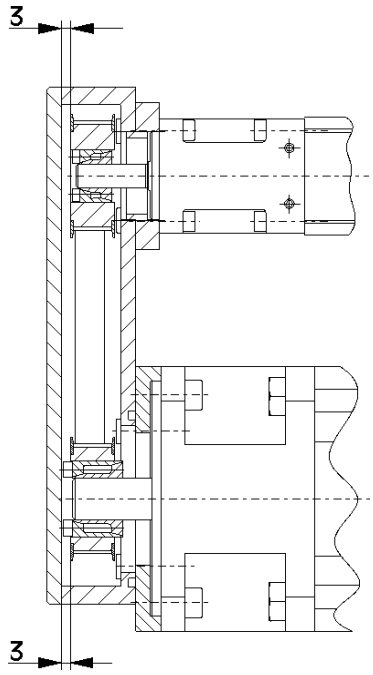

Fig. 8

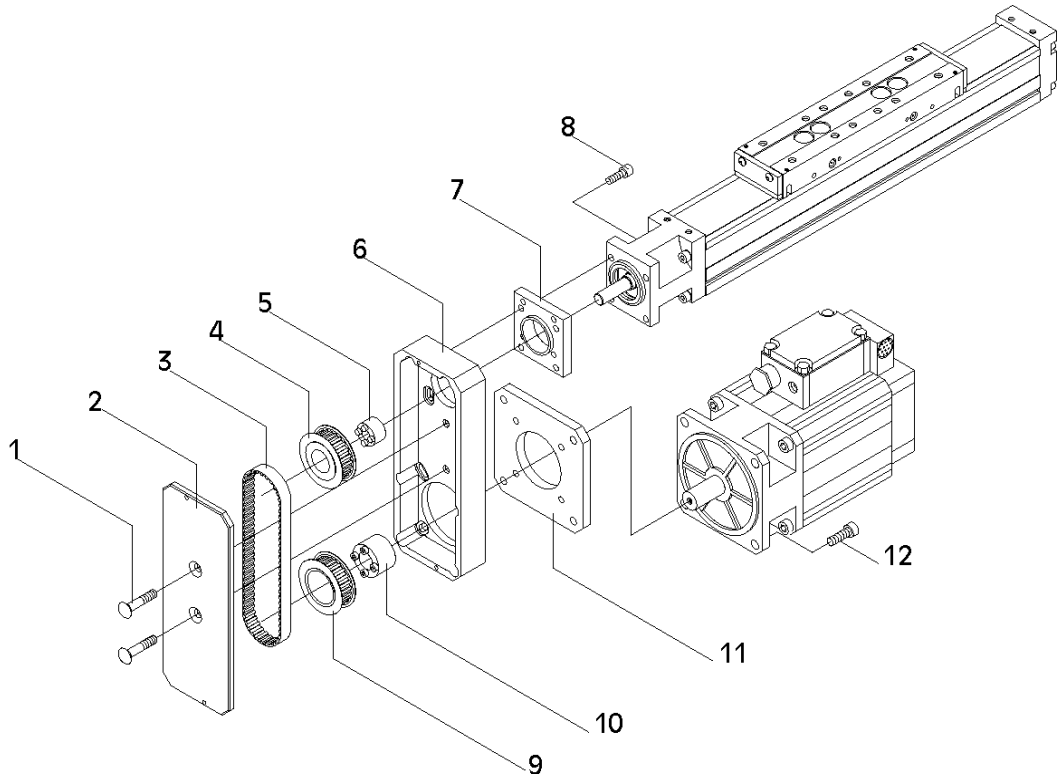

Fig. 9

Assembly of belt drive RT60/RT80

1. Fig. 11: Attach WIESEL linear drive unit and motor to housing (1).
2. Press ball bearings (2 and 3) onto synchronous sprockets (4 and 5).
3. Push the synchronous sprockets (4 and 5) with DKWN tension sets (6 and 7) onto profiles of motor and WIESEL linear drive unit, and clamp them. Tightening torque for screws on DKWN tension set depends on inside diameter (see table in Chapter 10 “Technical Data“). Distance between top of housing and synchronous sprocket: 5 or 3mm (see Fig. 10).
4. Insert toothed belt (8).
5. Insert tensioning roller (9) in housing, and fix with screw (10) and washer (11).
6. Place bearing plate (12) on roller bearing and tensioning roller, and fix with screws (13).

Tightening belt drive RT60/RT80

7. Fig. 11: Detach screw (10) from tensioning roller, and tighten tensioning roller anticlockwise with a SW8 hexagonal wrench at 0.5 Nm, and tighten screw (10).
8. Attach cover plate (14) with 4 countersunk screws (15).

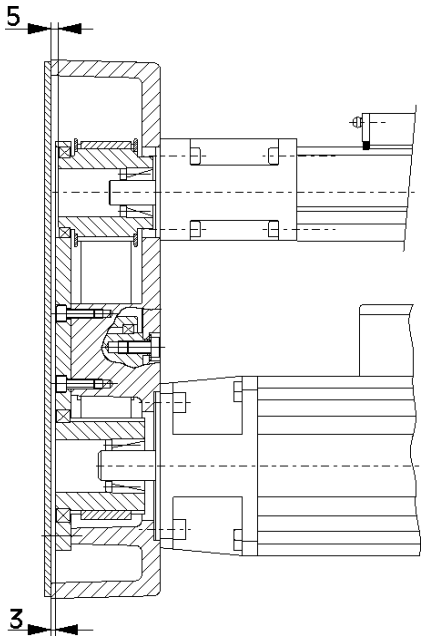

Fig. 10

Parts List Belt drive RT60/RT80

Item	Designation
1	Housing
2	Deep-groove ball bearing 61811 2RS1
3	Deep-groove ball bearing 61809 2RS1
4	Synchronous sprocket
5	Synchronous sprocket
6	DKWN tension set
7	DKWN tension set
8	Toothed belt
9	Eccentric tensioning roller
10	Cheese-head screw DIN7984, M8x20
11	Washer DIN125 – B8-St
12	Bearing plate
13	Cheese-head screw DIN912, M6x20
14	Cover plate
15	Countersunk screw DIN7991, M5x16
16	Cheese-head screw DIN912 (size depends on motor)
17	Cheese-head screw DIN912 M6x30 (for RT 60)
	Cheese-head screw DIN912 M8x25 (for RT 80)

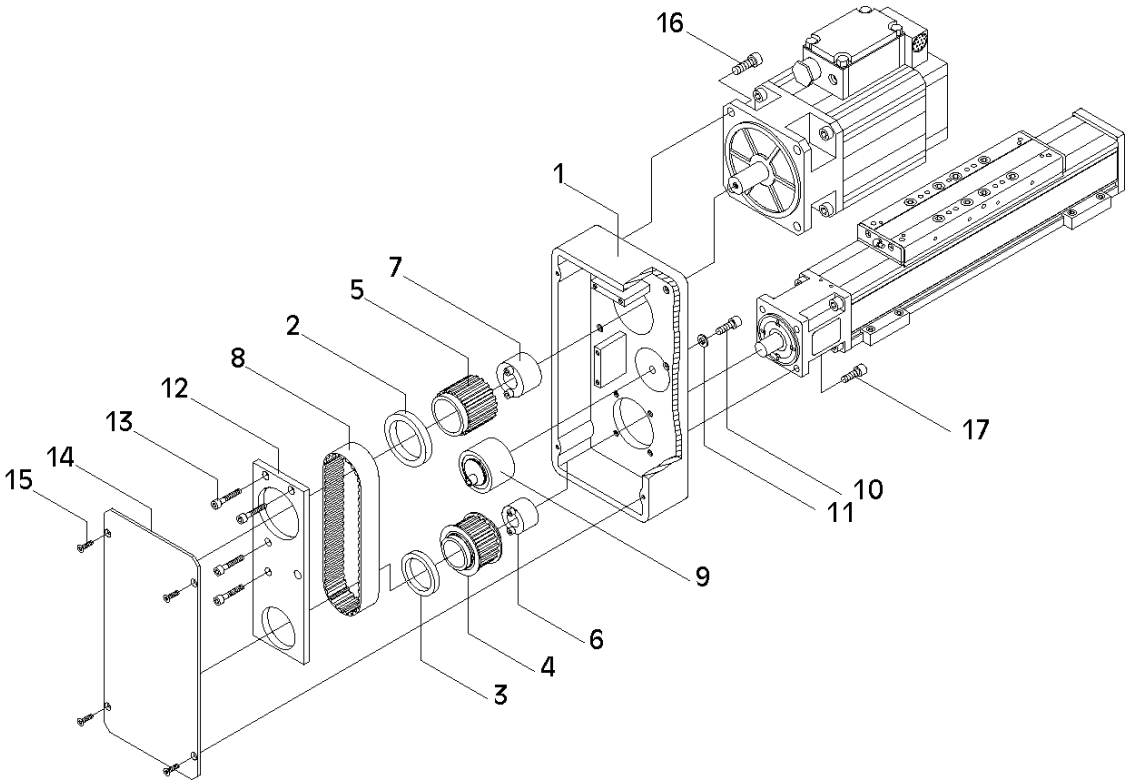

Fig. 11

Technical Data Belt Drive RT40/RT60/RT80

	RT 40 (i=1:1)	-
Total weight [1)] [kg]	0.62	-
Idle torque [1), 4)] [Nm]	0.3	-
Mass moment of inertia [1)] [kgcm^2]	0.25	-
Maximum transmittable torque [Nm]	1.75	-

	RT 60 (i=1:1)	RT 60 (i=2:1)
Total weight [2] [kg]	5.62	7.05
Idle torque [2), 4)] [Nm]	0.7	0.7
Mass moment of inertia [2] [kgcm²]	4.38	10.11
Maximum transmittable torque [Nm]	15	15

	RT 80 (i=1:1)	RT 80 (i=2:1)
Total weight [3] [kg]	5.52	6.95
Idle torque [3), 4)] [Nm]	0.7	0.7
Mass moment of inertia [3] [kgcm²]	4.65	10.38
Maximum transmittable torque [Nm]	30	30

[1] With DKWN tension sets: For profile diameter 8 mm on WIESEL side, profile diameter 14 mm on motor side

[2] With DKWN tension sets: For profile diameter 16 mm on WIESEL side, profile diameter 19 mm on motor side

[3] With DKWN tension sets: For profile diameter 20 mm on WIESEL side, profile diameter 24 mm on motor side

[4] static measurement

Assembly of parallel belt drive PRT40

1. Fig. 12: Fasten the linear drive units to the base plate (1) with the cheese-headed screws (15).
2. Fasten the synchronous sprockets (6) to the drive shafts of the linear units with the tension sets (8) (distance synchronous sprockets – base plate: 1 mm; Tightening torque for screws on DKWN tension set depends on inside diameter (see table in Chapter 10 “Technical Data“).
3. Loosely attach the tensioning rollers (13) to the base plate with two cheese-head screws (17).
4. Insert toothed belt (10).
5. Attach counter-bearing retainer (3) to the base plate with the cheese-head screws (16).
6. Attach the mounting plate (11) to the base plate with the detaining bolts (12) and eight cheese-head screws (19).
7. Attach motor to adapter flange (14) with four cheese-head screws (20) .
8. Fasten synchronous sprocket (7) to the motor shaft with the tension set (9) (distance between synchronous sprocket – base plate: 1 mm; tightening torque for screws on DKWN tension set depends on inside diameter (see table in Chapter 10 “Technical Data“).
9. Insert motor with synchronous sprocket into toothed belt, and attach the adapter flange to the mounting plate with four cheese-head screws (20).
10. Tighten the toothed belt with the tensioning roller (clamping torque of tensioning roller: 6 Nm).
11. Attach the cover plates (2) with the countersunk screws (18).

Parts list for parallel belt drive PRT40

Item	Designation
1	Base plate PRT40
2	Cover plate PRT40
3	Counter bearing retainer PRT40
4	Deep-groove ball bearing 61805
5	Deep-groove ball bearing 61902
6	Synchronous sprocket Al28 AT5
7	Synchronous sprocket Al22 AT5
8	DKWN tension set
9	DKWN tension set
10	Toothed belt 16AT5
11	Mounting plate PRT40
12	Retaining bolt PRT40
13	Tensioning roller PRT40 complete
14	Adapter flange PRT40 - 6SM45
15	Cheese-head screw DIN912, M4x16
16	Cheese-head screw DIN912, M6x35
17	Cheese-head screw DIN912, M6x16
18	Countersunk screw DIN966, M4x8
19	Cheese-head screw DIN7984, M5x12
20	Cheese-head screw DIN912, M6x12

Technical Data, Parallel Belt Drive PRT40

Minimum centre distance [mm]	200
Maximum centre distance [mm]	1000
Weight [1] [kg]	2.7
Weight [2] [kg]	0.2
Mass moment of inertia [1] [kgcm2]	0.98
Mass moment of inertia [2] [kgcm2]	0.013
Maxim transmittable torque	

[1] for centre distance 200 mm

[2] for each further 50 mm centre distance

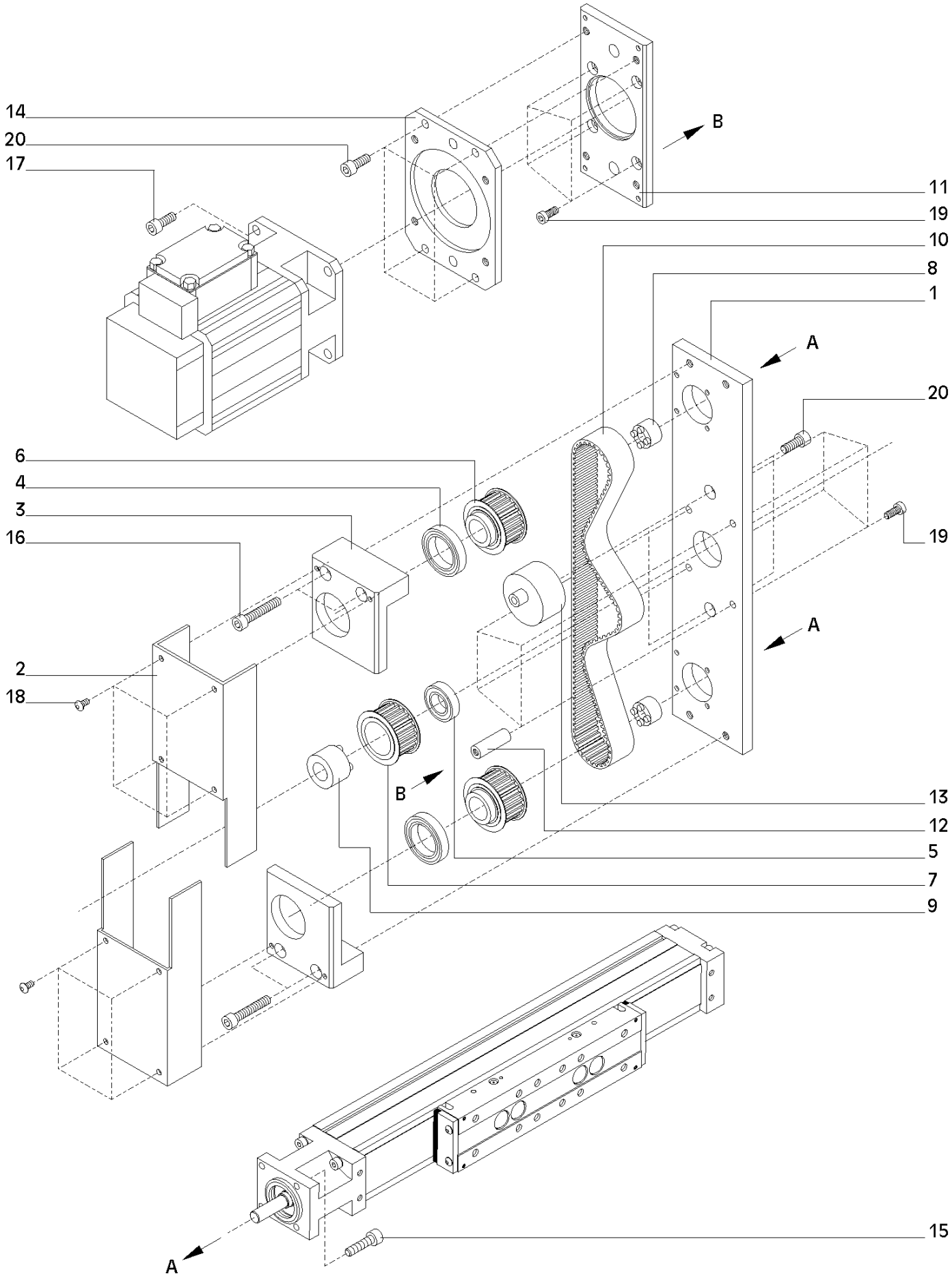

Fig. 12

Mounting the drive motor

The electrical installation and the checking of the direction of rotation may only be carried out by a licensed electrician.

Before mounting the drive, check the direction of rotation of the linear unit and the operation of the safety limit switches. To do this, proceed as follows:

Connect the motor in compliance with the electrotechnical regulations.

1. Fig. 13: Place the motor (1) in mounting position beside the linear drive unit.
2. Switch on the motor and check the direction of rotation in association with the safety limit switches (if necessary, change the direction of rotation by connecting the motor differently).
3. Attach the coupling half (4) to the shaft of the linear drive unit.
4. Attach the motor adapter flange (5) to the fixed bearing housing (6) with four screws.
5. Push the toothed wheel (3) onto the coupling half on the linear drive unit.
6. Mount the second coupling half (2) on the drive shaft of the motor.
7. Attach the motor with the coupling half to the motor adapter flange (5) with four screws. Ensure that no axial pressure is exerted on the motor shaft. If necessary, correct the distance between the two coupling halves.

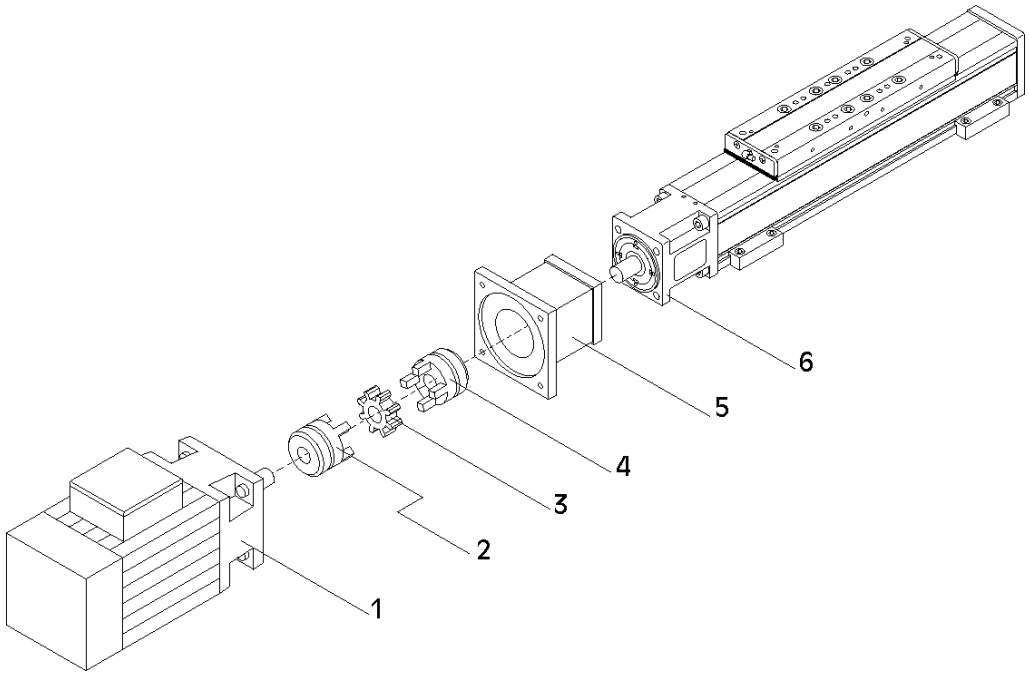

Fig. 13

5. Commissioning

The WIESEL DYNALine® and WIESEL POWERLine® mechanical linear drive units can carry out fast linear movements with great force. Structures in the sliding carriage can lead to injuries, e.g. crushing of body parts, or to damage through collision with other parts of the system.

Exercise the utmost caution during first start-up.

The acceleration and retardation of the linear drive unit can cause transported load to come loose and be thrown off.

The manufacturer's information for any supporting equipment used must be checked against the weight and acceleration data!

The linear drive units must not be put into service until the machinery into which it is to be incorporated fulfils all the provisions of the EC directive relating to machinery, the harmonised standards, European standards or the applicable national standards.

To comply with the regulations concerning electromagnetic compatibility of machines, care must be taken in installing them. Therefore the Standards EN 50 081-2 and EN 50 082-2 should be observed to avoid electromagnetic interference.

The electrical installation must be carried out by an EMC expert.

Pay attention to the notes in Chapter 4 “Mounting” on correct, safe preparation of your linear drive unit for first operation.

Before the first power-on, make sure that the inductive and/or mechanical limit switches are functioning properly. First cause the assembled linear drive unit to move through its complete range of travel so slowly that you can stop the movement in time to prevent a possible collision.

! Only after a collision test has been carried out may the system be tested at full speed.

6. Handling and Operation

The WIESEL DYNALine® and WIESEL POWERLine® mechanical linear drive units can carry out fast linear movements with great force. Structures in the sliding carriage can lead to injuries, e.g. crushing of body parts, or to damage through collision with other parts of the system. Proceed with the utmost caution during first start-up.

When a linear drive unit is operated with only short travel (<100mm) always at the same place, sufficient lubrication is not ensured. In this case, carry out a movement over the entire range of movement at regular intervals, after about 250 to 500 double travels.

During operation, occasionally check the correct function of the linear drive unit by visual inspection.

The operating and supervisory staff are duty bound to inspect the linear drive units or system for outwardly visible damage or faults at least once a shift. Any changes (including changes in the operating behaviour) that could affect safety must be reported at once.

7. Faulty operation

In the case of faulty operation, the operating sequence must be inspected by experts, and if necessary commissioning must be repeated. Pay special attention to the notes in Chapter 5 “Commissioning” to avoid injury and damage.

8. Maintenance

Lubrication

When a linear drive unit is operated with only short travel (<100mm) always at the same place, sufficient lubrication is not ensured. In this case, carry out a movement over the entire range of movement at regular intervals, after about 250 to 500 double travels.

During operation, occasionally check the correct function of the linear drive unit by visual inspection.

The following factors are important for exact determination of the lubrication interval:

- Load
- Speed
- Movement
- Temperature

Short lubrication intervals are necessary in cases of:

- Effects of dust and moisture
- Heavy loading
- High speed (up to $V_{max.}$)
- Short travel
- Low age stability of the lubricant

The mechanical components must be lubricated with a grease gun at the grease nipple on the sliding carriage as specified in the table below. The covering strip should be greased at the same time to prevent premature wear.

If the equipment is used under special conditions, we will be pleased to carry out an exact investigation on lubrication requirements. In this case, please get in touch with your supplier, or with NEFF Antriebstechnik Automation GmbH in Waldenbuch directly.

Grease type: Grease DIN51825–KPE1R-20 (petroleum-based poly-urea grease)

Original grease: Fuchs Lubritec URETHYN E/M1

Quantity of grease				
Size	40	60	80	120
DYNALine® WV [cm³ per 100 km]		4.0	5.5	8.0
POWERLine® WM [cm³ per 100 km]	5.0	10.0	13.0	19.0

⚠ Readjustment of the preloading of the ball screw drive can be undertaken only by **NEFF Antriebstechnik Automation GmbH** service!

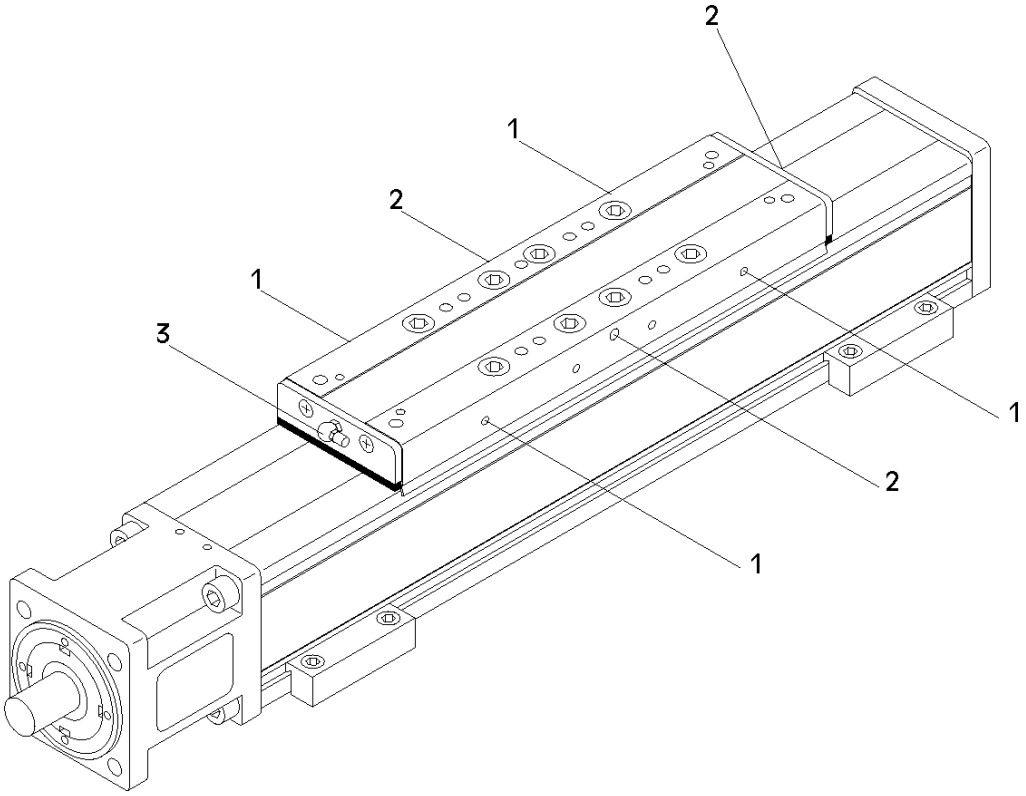

Fig. 14

WIESEL POWERLine® WM40

1. Standard mounting position of the grease nipples

WIESEL POWERLine® WM60, WM80, WM120

2. Standard mounting position of the grease nipple
3. Possible alternate mounting positions for grease nipple (modification by customer)

Retensioning the cover strip

Size WM40

The cover strip on the size WM40 does not normally stretch during operation. Retensioning is not therefore necessary.

Sizes WM/WV60, 80 and 120

A cover strip that stretches during operation is retensioned automatically. The loose end can be cut off as required.

Replacing the cover strip

a) Worn out cover strip still in place (all sizes)

1. Fig. 15: Move the sliding carriage to the backward end position (movable bearing side).
2. Loosen the threaded studs on the fixed bearing housing.
3. Size WM40: Loosen threaded studs on upper cover plate.
   Sizes WM/WV 60, 80, 120: Detach the leaf spring and spring holder on cover plate. Avoid bending the spring.
4. Pull the old cover strip with tensioning plate out of the fixed-bearing housing towards the movable bearing until it is about 20 cm from the sliding carriage (Attention: do not pull it through the carriage!). Take care that the tensioning plates do not fall into the tubular section while you are removing them from the fixed-bearing housing or cover plate.
5. Remove the old cover strip from the tubular section between fixed bearing and carriage and remove grease from the upper side.
6. Join the old and new strips flush between carriage and fixed bearing, and connect them with adhesive tape on the upper side.
7. Clip old and new strip into the tubular section, and move the carriage (by hand, if possible) towards the fixed bearing, until about 20 cm of the new strip is visible at the other end of the sliding carriage.
8. Remove the old cover strip and adhesive tape from the new cover strip, and dispose of them in an environmentally suitable way.
9. Fasten the new covering strip in the fixed-bearing housing with tensioning plate and threaded studs.

10. Pull the new strip on the movable-bearing side until it sits completely on the tubular section.
11. Clip the cover strip manually into the tubular section, starting at the fixed-bearing end.
12. Size WM40: Cut off cover strip with an overlap of 6-7 mm (depth of insertion pouch in cover plate 8mm).
    Sizes WM/WV 60, 80, 120: Mount the leaf spring and the spring holder in the cover plate. Attention: the leaf spring must be fitted bent towards the back of the unit!
13. Insert the end of the cover strip on the movable-bearing side through the cover plate simultaneously clipping it into the tubular section, starting at the sliding carriage.
    Size WM40: Fasten cover strip in end plate, using the tension plate and the threaded studs.
14. Sizes WM/WV 60, 80, 120:
    The overlapping end of the cover strip may be cut off.

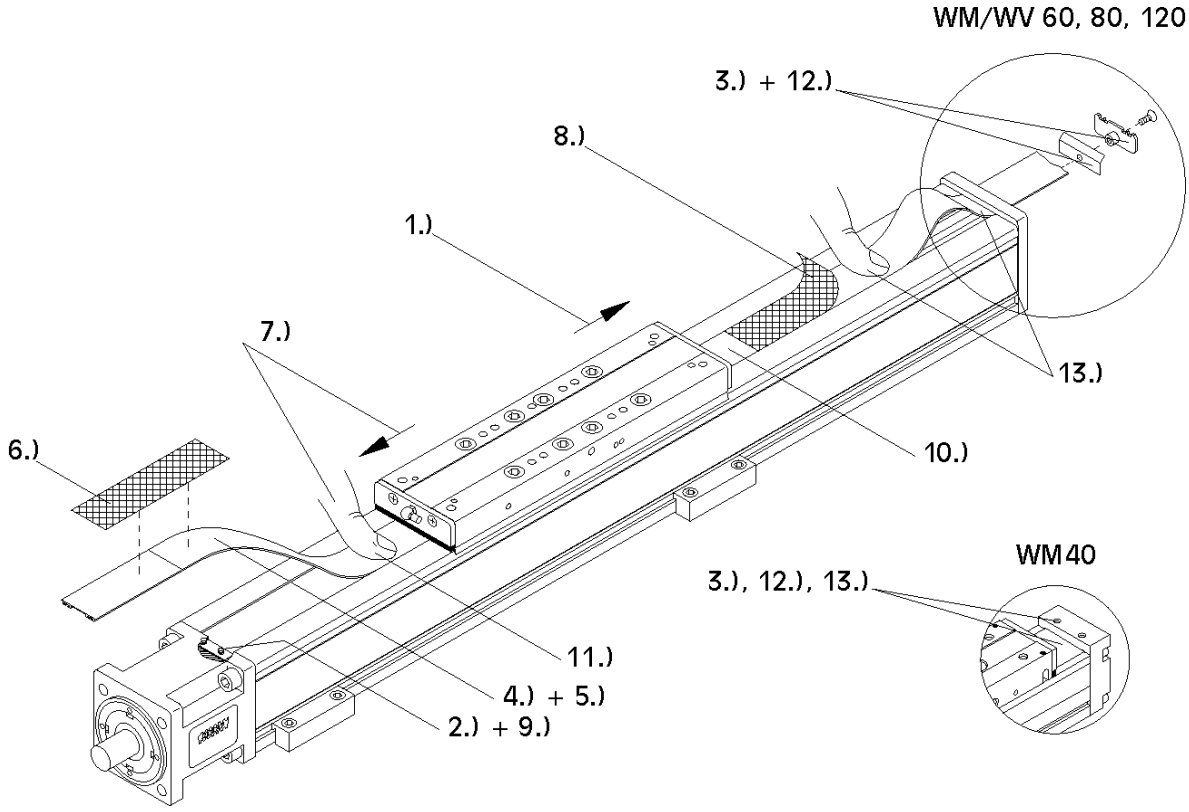

Fig. 15

b) Worn out cover strip no longer in place

Size WM40

1. Fig. 16: Remove both scraper brushes.
2. Loosen threaded studs of the two outer strip holding rollers.
3. Press the cylindrical pins out of the outer holding rollers.
4. Remove strip holding rollers.
5. Push cover strip through sliding carriage.
6. Fasten the cover strip in the fixed-bearing housing, using the tension plate and threaded studs.
7. Clip the cover strip into the tubular section up to the sliding carriage.
8. Insert the front strip holding roller into the sliding carriage.
9. Push the cylindrical pin through the front strip holding roller.
10. Screw in threaded studs until cylindrical pin is fixed crosswise and the cover strip under it is completely clipped into the tubular section.
11. Clip the cover strip into the tubular section behind the sliding carriage and up to the cover plate.
12. Insert the rear strip holding roller into the sliding carriage.
13. Push cylindrical pin through strip holding roller.
14. Screw in threaded studs until cylindrical pin is fixed crosswise and the cover strip under it is completely clipped into the tubular section.
15. Cut off cover strip, leaving an overlap of 6-7 mm (depth of pocket in cover plate is 8 mm).
16. Fasten the cover strip in the end plate, using the tension plate and threaded studs.
17. Replace the scraper brushes.

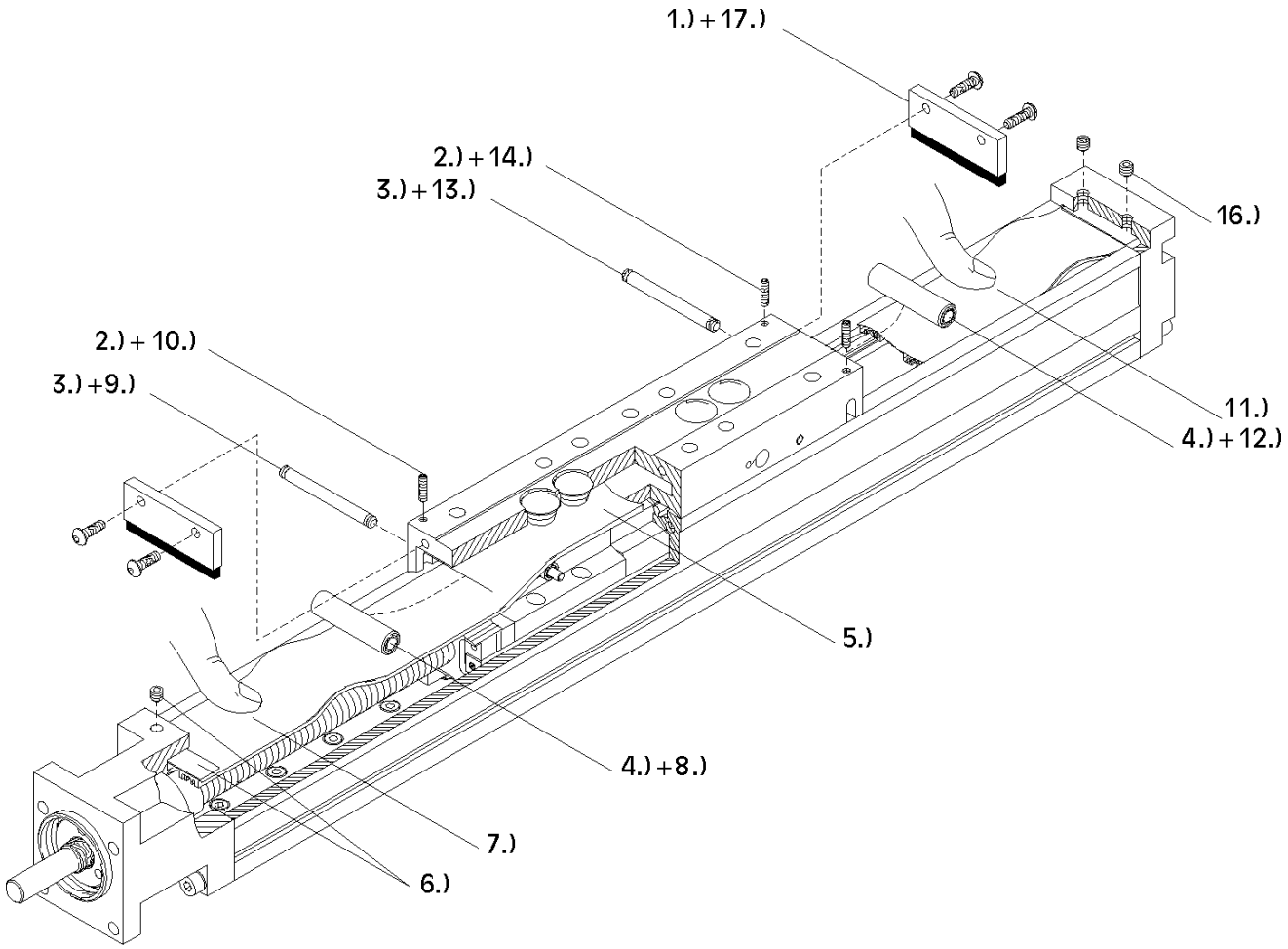

Fig. 16

Sizes WM/WV60, 80 and 120

1. Remove the fastening screws from the sliding carriage and carefully lift the complete carriage off vertically. Attention: Ensure that the strip holders remain lying on the tubular profile!
2. Push the new cover strip through both strip holders (at the first one, diagonally up from below, at the second diagonally down from above).
3. Fasten the cover strip in the fixed-bearing housing with the tension plate and the threaded studs.
4. Clip the cover strip into the tubular section in front of and behind the adapter.
5. Shift the strip holders until they sit close to the end of the adapter, and align them on the tubular section so as to allow for a centred run of the strip through the holders.
6. Carefully lower the sliding carriage vertically onto the adapter and fasten it (for the tightening torque of the screws, see the table in Chapter 10 “Technical Data“). Take care not to displace the holders, and that the treaded studs of the carriage sit exactly in the respective holes in the strip holders.
7. Mount the leaf spring and spring holder in the cover plate. Attention: The leaf spring must be installed so that it is bent backwards!
8. At the end next to the movable bearing, push the end of the cover strip through the cover plate, and at the same time clip it into the tubular section, beginning at the sliding carriage.
9. The overlapping end of the cover strip may be cut off.

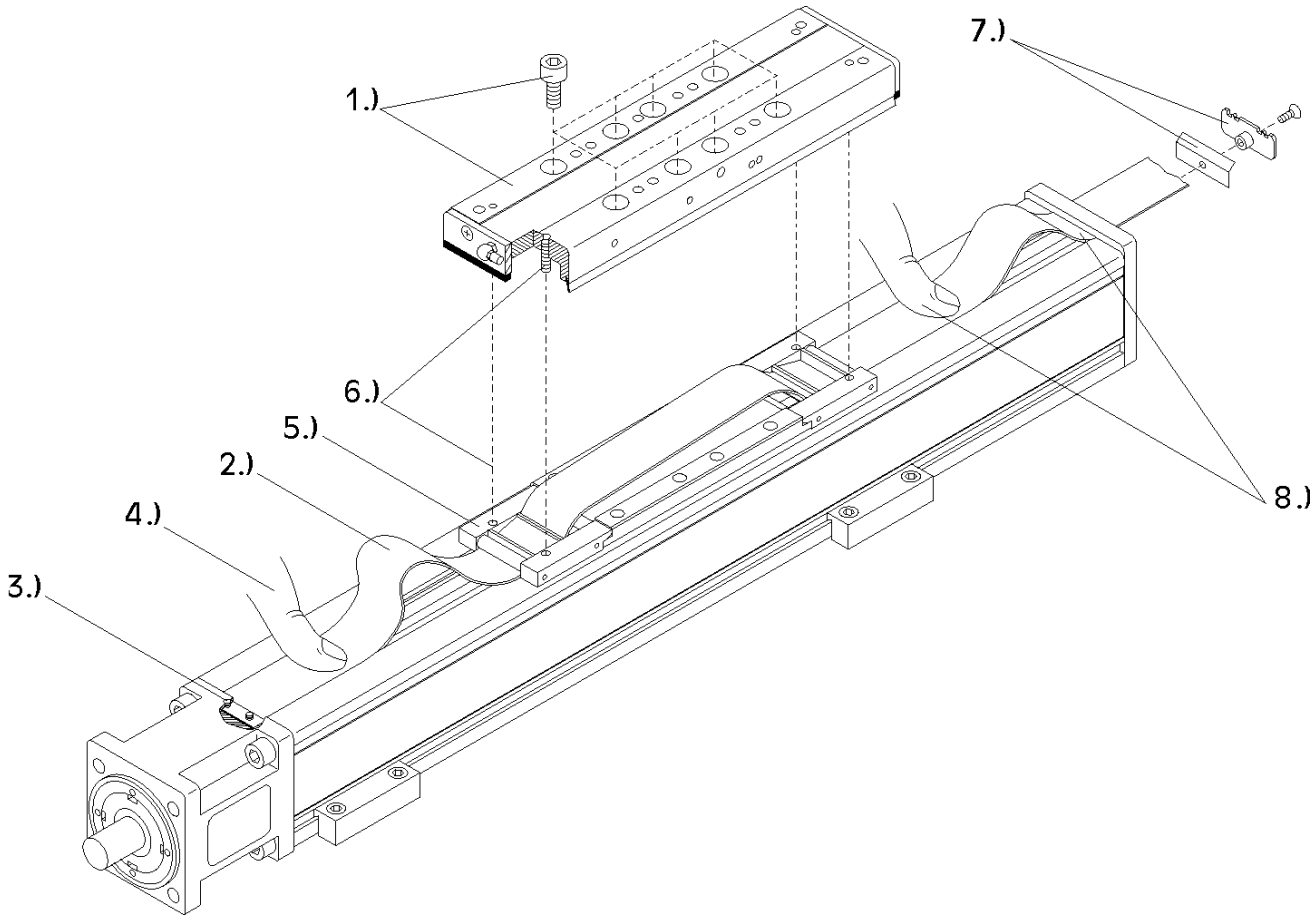

Fig. 17

9. Removal/Dismantling

Linear drive units may be removed only when the machine is switched off and by trained personnel. Proceed in the reverse sequence as described in chapter 4 “Mounting a linear “. Pay particular attention to the safety notices in this chapter.

10. Technical Data

WIESEL POWERLine®

Size	WM40	WM60	WM60-370	WM60-500
Permissible revolutions [min^{-1}]	3000	3000	3000	3000
Speed [1)] [m/s]	0.25	2.5	2.5	2.5
Acceleration [m/s^2]	20	20	10	20
Maximum travel (Standard) [mm]	2000	5000	5000	5000
Repeat precision [2)] [mm]	± 0.01	± 0.01	± 0.01	± 0.01
Lead precision [300mm]	0.05	0.05	0.05	0.05
Ambient temperature [°C] (continuous operation)	0-80	0-80	0-80	0-80
Surface inertia I_x [mm^4]	$10.8 \cdot 10^4$	$5.8 \cdot 10^5$	$5.8 \cdot 10^5$	$5.8 \cdot 10^5$
Surface inertia I_y [mm^4]	$13.4 \cdot 10^4$	$5.9 \cdot 10^5$	$5.9 \cdot 10^5$	$5.9 \cdot 10^5$
Weight (w/o travel) [kg]	1.5	6.16	3.8	10.33
Weight (per 100 mm travel) [kg]	0.3	0.64	0.65	0.64
Weight of sliding carriage with [kg]	0.36	1.99	1.0	1.99
Noise emission at 1500min^{-1} dB(A)]	approx. 66	approx. 66		

Diameter of driving screw [mm]		12	20			20			20
		Idling torque [Nm]							
Lead P of the driving screw [mm]		5	5	20	50	5	20	50	5
Revolutions [1/min]	150	0.3	0.6	1.1	1.5	0.5	0.9	1.	1.2
	1500	0.5	1.1	1.8	2.3	0.9	1.4	1.	2.2
	3000	0.8	1.6	2.0	2.5	1.3	1.6	2.	3.2
		Dynamic load ratings							
$C_{KGM\,P=4}$ [N]		-	-			-			-
$C_{KGM\,P=5}$ [N]		2393	7552			7552			7552
$C_{KGM\,P=10}$ [N]		-	-			-			-
$C_{KGM\,P=20}$ [N]		-	8312			8312			8312
$C_{KGM\,P=40}$ [N]		-	-			-			-
$C_{KGM\,P=50}$ [N]		-	4677			4677			4677
$C_{FS\,y}$ [N]		(2x) 2786	(4x) 11495			(4x) 12964			(4x) 11495
$C_{FS\,z}$ [N]		(2x) 3397	(4x) 10581			(4x) 11934			(4x) 10581
$L_{FS\,x}$ [mm]		87	141.7			-			141.7
$L_{FS\,y}$ [mm]		-	35			35			35
		dynam. [N]							
Loads	F_x drive	1000	4000			2800			4000
	F_y	450	2000			1400			2000
	$\pm F_z$	600	2000			1400			2000
		dynam. [Nm]							
Load moments	Mx	10	100			50			100
	M_y [3)]	30	200			100			200
	M_z [3)]	30	200			100			200

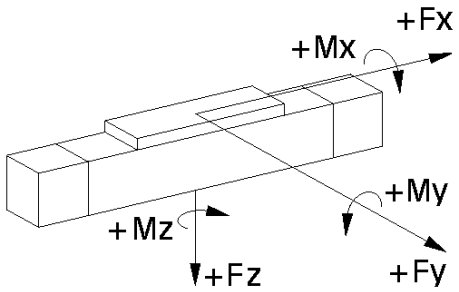

[1)] Depending on the screw lead at maximum revs.
[2)] Value depends on the precision of the external guides
[3)] Permitted values are increased for long sliding carriage or additional, loose sliding carriage

! The permissible threshold values for forces and moments for the respective linear drive units must not be exceeded at any time.

WIESEL *DYNALine*®

Size	WM80	WM80-370	WM120
Permissible revolutions [min^{-1}]	3000	3000	3000
Speed [1)] [m/s]	2.5	2.0	2,5
Acceleration [m/s^2]	20	10	20
Maximum travel (Standard) [mm]	5000	5000	5000
Repeat precision [2)] [mm]	± 0.01	± 0.02	± 0.01
Lead precision [300mm]	0.05	0,05	0,05
Ambient temperature [°C] (continuous operation)	0-80	0-80	0-80
Surface moment of inertia I_y [mm^4]	$1.9 \cdot 10^6$	$1.9 \cdot 10^6$	$7.7 \cdot 10^6$
Surface moment of inertia I_z [mm^4]	$1.9 \cdot 10^6$	$1.9 \cdot 10^6$	$9.4 \cdot 10^6$
Weight (w/o travel) [kg]	11.57	7.0	25.91
Weight (per 100 mm travel) [kg]	1.08	1.1	1.93
Weight of sliding carriage [kg]	4.26	1.6	9.25
Noise emission at 1500min^{-1} dB(A)]	approx. 66		approx. 70

Diameter of drive screw [mm]		25				25				32			
		Idling torque [Nm]											
Lead P of the drive screw [mm]		5	10	20	50	5	10	20	50	5	10	20	40
Revolutions [1/min]	150	0.8	1.4	1.6	2.3	0.6	1.1	1.3	1.8	1.	2.1	1.8	2.4
	1500	1.4	1.9	2.0	2.8	1.1	1.5	1.6	2.2	2.	3.0	2.8	3.6
	3000	1.8	2.3	2.3	3.4	1.4	1.8	1.8	2.7	2.	3.8	3.5	4.0
		Dynamic load ratings											
$C_{KGM\,P=4}$ [N]		-				-				-			
$C_{KGM\,P=5}$ [N]		8804				8804				15429			
$C_{KGM\,P=10}$ [N]		9311				9311				24049			
$C_{KGM\,P=20}$ [N]		9365				9365				20667			
$C_{KGM\,P=40}$ [N]		-				-				8341			
$C_{KGM\,P=50}$ [N]		8572				8572				-			
$C_{FS\,y}$ [N]		(4x) 14356				(2x) 18723				(4x) 18723			
$C_{FS\,z}$ [N]		(4x) 13739				(2x) 17919				(4x) 17919			
$L_{FS\,x}$ [mm]		154				-				186			
$L_{FS\,y}$ [mm]		49.75				49.75				80.75			
		dynam. [N]											
Loads	F_x drive	5000				3500				12000			
	F_x drive 3240	-				-				8000			
	F_y	3000				2100				6000			
	$\pm F_z$	3000				2100				6000			
		dynam. [Nm]											
Load moments	M_x	350				150				500			
	M_y [3)]	300				180				600			
	M_z [3)]	300				180				600			

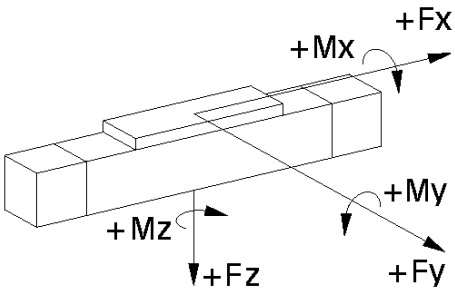

[1)] Depending on the screw lead at maximum revs.
[2)] Value depends on the precision of the external guides
[3)] Permitted values are increased for long sliding carriage or additional, loose sliding carriage

! The permissible threshold values for forces and moments for the respective linear drive units must not be exceeded at any time.

WIESEL *DYNALine*®

Size	WV60	WV80	WV120
Permissible revolutions [min^{-1}]	3000		
Speed [1)] [m/s]	2.5		2.0
Acceleration [m/s^2]	20		
Maximum travel (Standard) [mm]	5000		
Repeat precision [2)] [mm]	± 0.01		
Lead precision [300mm]	0.05		
Ambient temperature [°C] (continuous operation)	0-80		
Surface moment of inertia I_y [mm^4]	$5.8 \cdot 10^5$	$1.9 \cdot 10^6$	$7.7 \cdot 10^6$
Surface moment of inertia I_z [mm^4]	$5.9 \cdot 10^5$	$1.9 \cdot 10^6$	$9.4 \cdot 10^6$
Weight (w/o travel) [kg]	4.72	7.95	18.1
Weight (per 100 mm travel) [kg]	0.55	0.99	1.94
Weight of sliding carriage [kg]	1.42	2.25	4.75

Noise emission at 1500min^{-1} dB(A)]		approx. 66			appox. 66				approx. 70			
Diameter of the drive screw [mm]		20			25				32			
		Idling torque [Nm]										
Lead P of the drive screw [mm]		5	20	50	5	10	20	50	5	10	20	40
Revolutions [1/min]	150	0.6	0.7	0.8	1.0	1.0	1.1	1.2	1.0	1.0	1.1	1,2
	1500	1.1	1.2	1.3	1.7	1.8	1.9	2.0	2.1	2.2	2.3	2.5
	3000	1.5	1.7	1.9	2.2	2.3	2.4	2.6	2.4	2.6	2.7	3.0
		Dynamic load ratings										
$C_{KGM\ P=4}$ [N]		-			-				-			
$C_{KGM\ P=5}$ [N]		7552			8804				15429			
$C_{KGM\ P=10}$ [N]		-			9311				24049			
$C_{KGM\ P=20}$ [N]		8312			9365				20667			
$C_{KGM\ P=40}$ [N]		-			-				8341			
$C_{KGM\ P=50}$ [N]		4677			8572				-			
$C_{FS\ Y}$ [N]		-			-				-			
$C_{FS\ Z}$ [N]		-			-				-			
$L_{FS\ X}$ [mm]		-			-				-			
$L_{FS\ Y}$ [mm]		-			-				-			
		dynam. [N]										
Feed force [3)]	F_X drive	4000			5000				12000			
	F_X drive 3240	-			-				8000			

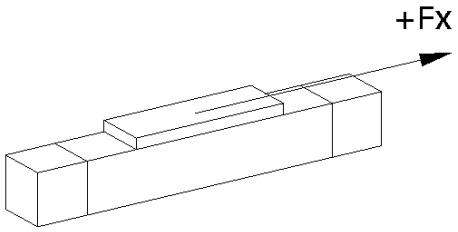

[1)] Depending on the screw lead at maximum revs.
[2)] Value depends on the precision of the external guides

! The permissible threshold values for forces and moments for the respective linear drive units must not be exceeded at any time.

Tightening Torque, DKWN Tension Sets

Size	Inside ø	Outside ø	Screw	M_A [Nm]
8-18	8	18	M2.5	1.2
14-26	14	26	M3	2.1
16-32	16	32	M4	4.9
19-35	19	35	M4	4.9
20-38	20	38	M5	9.7
24-47	24	47	M6	16.5

Tightening Torque, KAO Attachment Screws

Thread	M_A [Nm] for material:	
	Steel	Aluminium
M5		
M6		
M8		

Tightening Torque for Attachment Screws

Thread	M_A [Nm] for material:	
	Steel	Aluminium
M5		
M6		
M8		